由 Autodesk 教育版产品制作

REV.	ECN NO OR DESCRIPTION	REVISED	DATE
A	PROPOSE ONLY	ERIC	2014.08.13

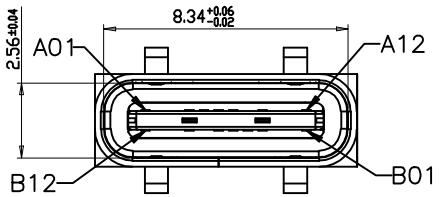

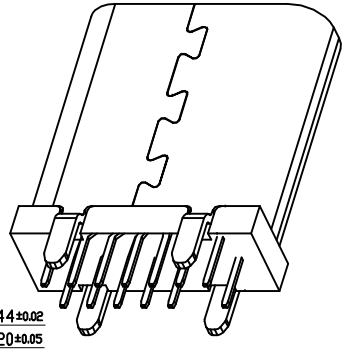

SPECIFICATIONS:
1. ELECTRICAL CHARACTERISTICS:
   1-1. CONTACT RESISTANCE: 30mΩ MAX.
   1-2. DIELECTRIC WITHSTANDING VOLTAGE: 100V AC FOR ONE MINUTE.
   1-3. INSULATION RESISTANCE: 100MΩ MIN. MEASURED BY 500 VDC
2. MECHANICAL CHARACTERISTICS:
   2-1. INSERTION FORCE :0.5-2.0Kgf(REF.)
   2-2. WITHDRAWAL FORCE :0.8-2.0Kgf(REF.)
3. LIFE TEST: 10,000 CYCLES.
4. TO CONFORM TO THE KRCONN HAZARDOUS SUBSTANCE FREE SPEC.

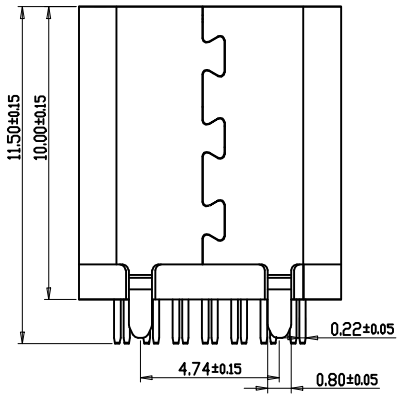

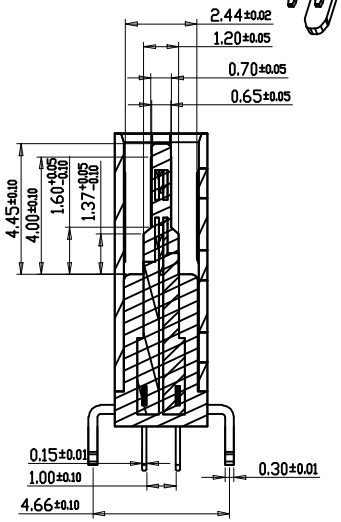

截面 1-1

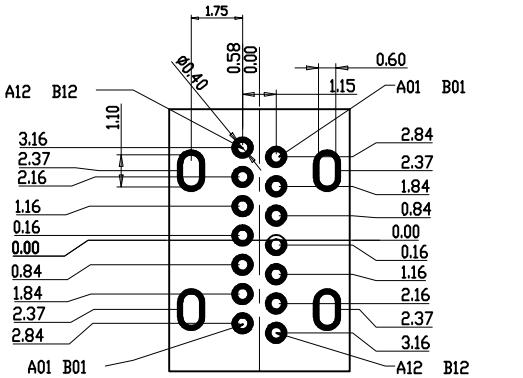

RECOMMENDED P.C.B. LAYOUT (T:1.00mm)
TOLERANCE UNSPECIFIED ±0.05mm

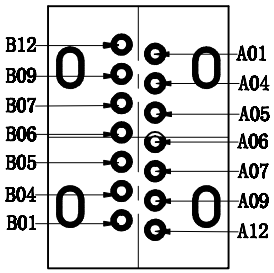

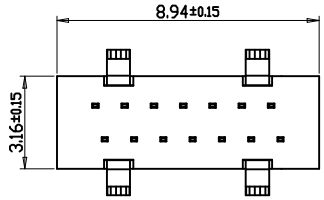

PIN	SIGNAL NAME	PIN	SIGNAL NAME
A1	GND	B12	GND
A4	VBUS	B9	VBUS
A5	CC1		
A6	DP1	B7	DN2
A7	DN1	B6	DP2
		B5	CC2
A9	VBUS	B4	VBUS
A12	GND	B1	GND

NO.	DESCRIPTION	MATERIAL	REMARKS	QTY
6	SHELL	STAINLESS STEEL	Ni-Plated	1PCS
5	SHIELDING PLATE	STAINLESS STEEL	—	1PCS
4	MD	HIGH TEMPERATURE PLASTIC	BLACK	1PCS
3	CONTACT	COPPER ALLOY	Au/Ni Plated	1SET
2	CONTACT	COPPER ALLOY	Au/Ni Plated	1SET
1	HOUSING	HIGH TEMPERATURE PLASTIC	BLACK	1PCS

UNLESS OTHERWISE SPECIFED TOLERANCES

DECIMALS:		ANGLES:	
X	±0.5	X	±2°
X.X	±0.10	X.X	±1°
X.XX	±0.05		
X.XXX	±0.02		

深圳市虹康科技有限公司

TITLE	TYPE-C 母 180度 10.0(加筋)		
DWN	Johnie	SHK-31008	
CHKD	Kevin.d	SCALE:1:1	UNIT: mm
APVD	Simon.Mo	SIZE: A4	SHEET:1OF1	REV: A

CUSTOMER COPY

由 Autodesk 教育版产品制作