| REV. | ECN NO | LOCATIONS | DESCRIPTION | DATE |
|---|---|---|---|---|
| | | | | |

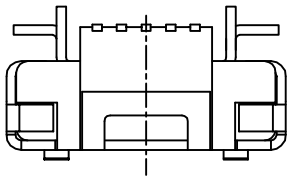

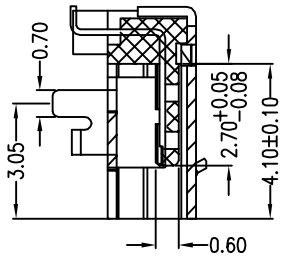


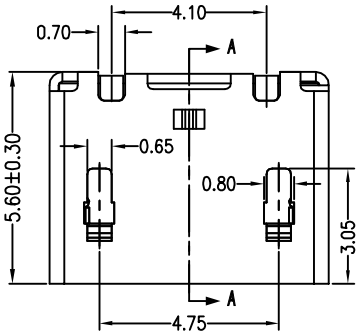


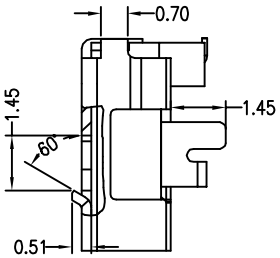


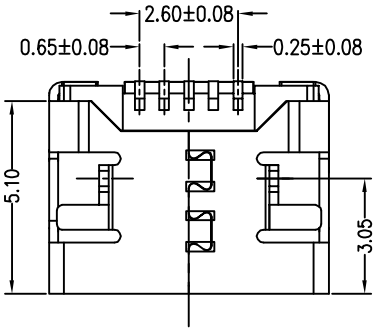


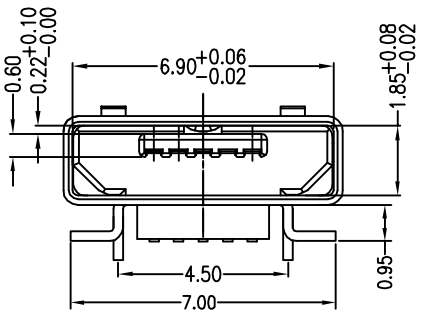


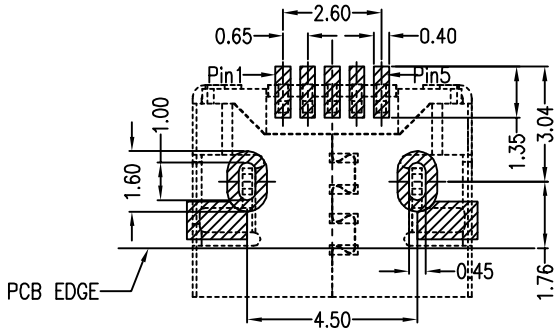


RECOMMANDED PCB LAYOUT

PCB图仅供参考

Note:

1.Material:

1.1 Housing: High temperature thermoplastic with g.f,UL94v-0

1.2 Contact: copper alloy,t=0.15mm

1.3 Shell: copper alloy,t=0.25mm

2.Specification:

2.1 Current rating:1,5PIN 1.8A Max/2,3,4PIN 1A Max.

2.2 Dielectric withstanding voltage: 100 V(ac) for 1 min.

2.3 Contact resistance: 30 mΩ Max.

2.4 Insulation resistance: 100 MΩ Min.

2.5 Total mating force: 3.57 Kgf Max.

2.6 Total unmating force: 1.0 Kgf Min.

2.7 Temperature range: -30°C~80°C

**A 01 S B X X X X X XX-483**

① ② ③ ④ ⑤ ⑥ ⑦ ⑧ ⑨ ⑩ ⑪

外壳材质 1:C2680R-H

外壳电镀 1:N100u'' 2:雾T100u'' 3:N+Au1u''(脚) 4:Au1u''

端子材质 4:C5191R-EH

主体材质 1:LCP

主体颜色 B:黑色

端子电镀 01:Au1u'';02:Au1.5u'';03:Au3u'' 05:Au5u'' ;10:Au10u'';15:Au15u'';30:Au30u''

| | | | |
|---|---|---|---|
| PART NO: A01SBXXXXXXX-483 | | MATERAL: SEE NOTE | 深圳市虹康科技有限公司 |
| MODEL NO: XX | | FINSH: SEE NOTE | |
| UNIT: MM | SIZE: A4 | COLOR: SEE NOTE | TITLE: Micro USB 5S AB Type垫高0.9前贴后插无导位 |
| TOLERANCE UNSPECIFIED | | DR: xiayouhong | DWG NO: SHK-20048 / REV: A |
| .x 0.15 | | CHK: | |
| .xx 0.10 | | | |
| .xxx 0.05 | | APP: | SCALE: 5:1 / DATE: 2014.11.18 |
| Ang. 1° | | | |