CUSTOMER DRAWING

专利产品
仿冒必究

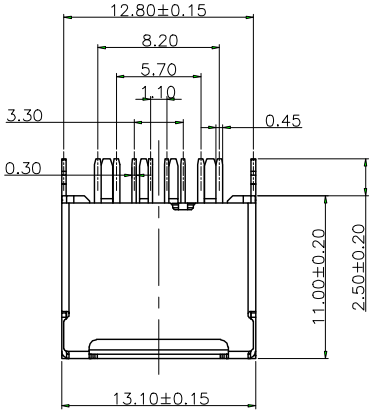

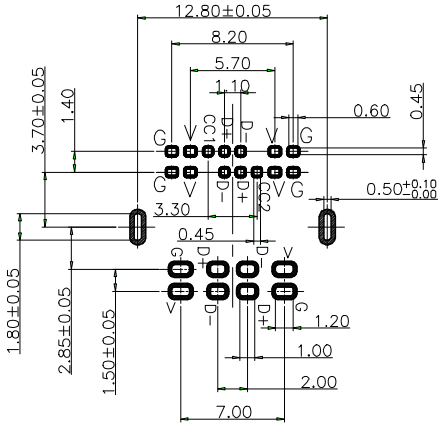

Recommended P.C.B Layout
Tolerance:±0.05

NOTE :
UT01FD022SX0XZA
1
Shell material
01:COPER ALLOY
02:STEEL

1.Seletive Plating
S1:5u" Gold In Contact Area
100u" Tin In Tail Area
S2:0.8u" Gold In Contact Area
100u" Tin In Tail Area
S3:10u" Gold In Contact Area
100u" Tin In Tail Area
S4:15u" Gold In Contact Area
100u" Tin In Tail Area
S5:30u" Gold In Contact Area
100u" Tin In Tail Area

SPECIFICATION:
1. CURRENT RATING:
a:TYPE-C: 8.0A MAX
b:USB2.0: 5.0A MAX
2. Withstanding Voltage: 100V AC
3. TEMPERATURE RANGE: -30 ˚C ~ 85 ˚C
4. CONTACT RESISTANCE: 40 MILLIONHM MAX
5. INSULATION RESISTANCE: 100 MEGOHMS
6. LNSERTION FORCE : 5N~20N
7. UNMATING FORCE: 8N~20N (1~1000次)
6N~20N (10000次之后)
8. DURABILITY: 10,000 CYCLES

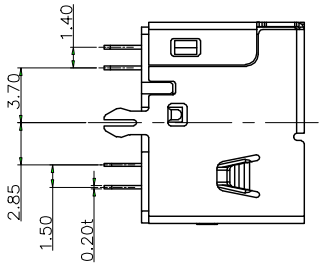

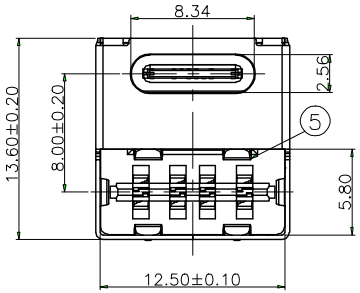

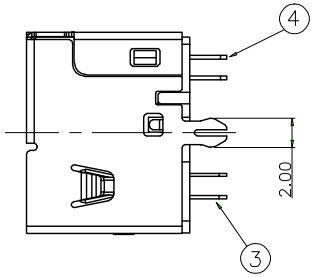

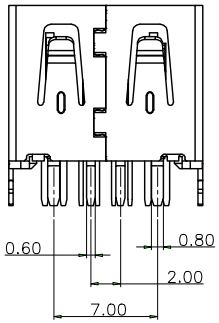

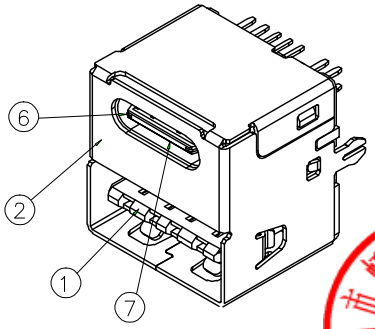

NO.	DESCRIPTION	MATERIAL	COLOR	REMARK
7	TYPE C MD	HIGH TEMP	BLACK	UL 94V-0
6	CENTER PIECE	STAINLESS STEEL	——	NO Plated
5	TYPE C TERMINAL	COPPER ALLOY	——	Gold Plated
4	CLIP	SEE NOTE	——	Ni Plated
3	USB TERMINAL	COPPER ALLOY	——	Gold Plated
2	SHELL	SEE NOTE	——	Ni Plated
1	HOUSING	HIGH TEMP	BLACK	UL 94V-0

深圳市虹康科技有限公司

ECN(DCN) NO.	REV.	DESCRIPTION	DATE	CHANGE	APPRO.	GENERAL TOLERANCE UNLESS OTHERWISE NOTED	
						30~	±0.50
						10~ 30	±0.30
						~ 10	±0.15
——	PA	NEW	17-08-26	LUI	JUAN	ANGLES	±2°

DRAW		PART NO.	UT01FD022SX0XZA				
DESIGN		DRAW NAME	TYPE C母座14PIN与USB 2.0双面插二合一				
CHECK		DRAW NO.	SHK-31009			REV.	PA
APPRO.		UNIT	mm	SCALE	1:1	PAGE 1of1	VIEW