REV.	ECN.NO.	APPD.
A	/	Hexing

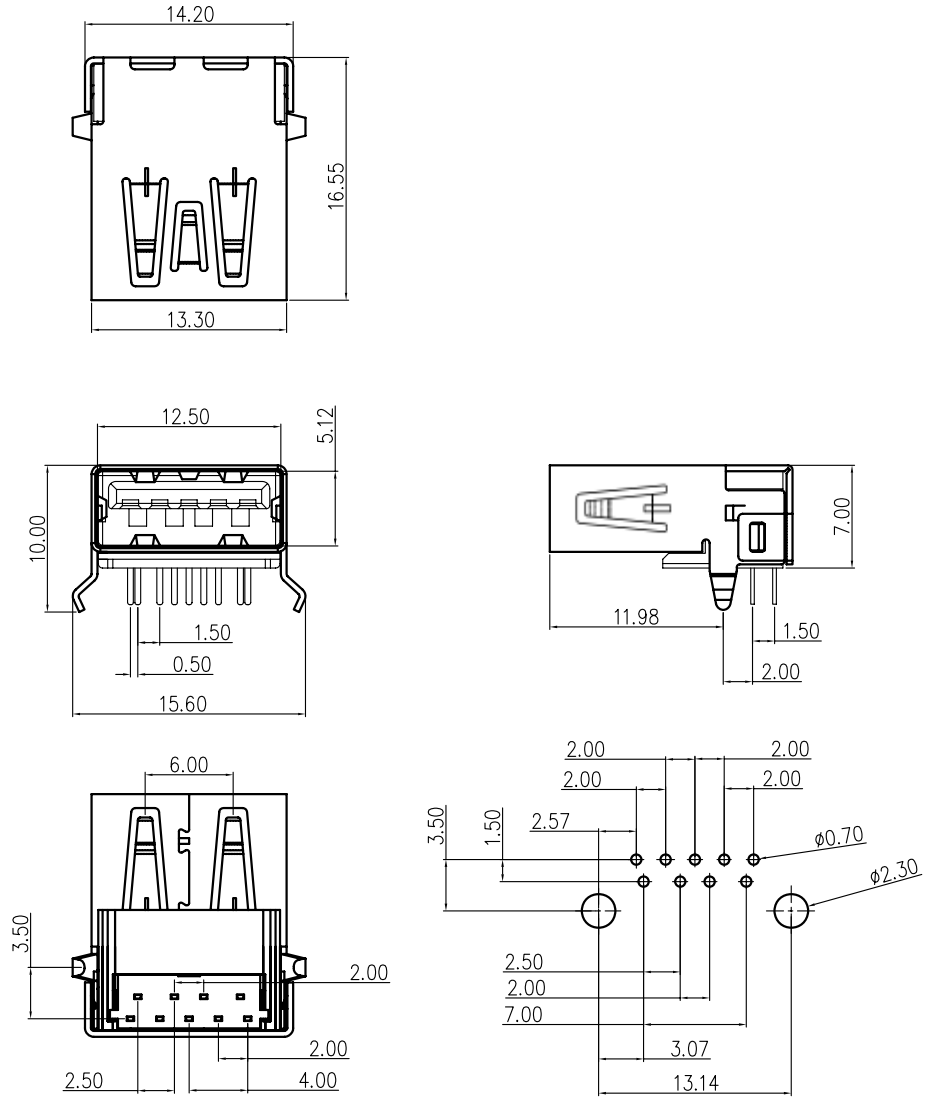

Remark:

1.MATERIAL:

1.1 Housing:thermoplastic plastics.

1.2 terminals:Copper Alloy

1.3 Shell:Copper Alloy/SPCC.

2.characteristics:

2.1 Rating Voltage : 30V AC.

2.2 Rating Current:PIN1&PIN4(Vbus&Correponding ground PIN)

1.8A MAX Other PINS 0.25A min.

2.3 Contact Resistance:PIN1&PIN4:30 mΩ MAX. Other PINS: 50 mΩ

2.4 Insulation Resistance:100 MΩ MIN.

2.5 Withstanding Voltage:AC 100V between adjacent contacts

2.6 Mating force: 3.57Kgf MAX(35N MAX)

2.7 Extraction force:1Kgf Min(9.8N Min)

2.8 Life test:1500Cycles MIN.

2.9 Temperature Range: −30℃～+80℃.

U321−062X−XXX0X1

- X: 1:Iron alloy Ni plating; 5:Copper alloy Ni plating
- X: 1:Au 1u"; 3:Au 3u"; 5:Au 5u"; 7:Au 10u'; 8:Au 15u"; A:Au 30u"
- X: 1:Black; 7:Blue 300C; 8:Blue 300C−1; C:Blue 300C−2; E:Blue 300C−3; 9:Carbon black425C
- X: 1:PA66; 2:PBT; 6:LCP
- X: 1:tray; 2:Tube; 8:Tape&Reel; 9:Tape&Reel+Mylar

TOLERANCE UNLESS OTHERWISE SPECIFIED		深圳市虹康科技有限公司				
.XXX ±0.10 .XX ±0.20 .X ±0.30	.X° ±3° .XX° ±2°					
APPROVED		PART NAME:	USB 3.0 AF 90度无卷边			
CHECKED		PART No:	SHK-30133			C
DRAWED	Hexing	PROJECTION:	UNIT:	SCALE	SHEET	REV.
DATE	2014.08.01		mm	1:1	1OF1	A